Document Number: 47I00-1, Rev B
Installation Instructions

47A00-1

Description:

The 47A00-1 is a Wireless Quad Pet Immune PIR (Passive Infrared) Motion Detector that works with the HAI 45A00-1 Wireless Receiver. It has a unique Automatic Power Saver (APS) mechanism which enables transmitter activation only 2 minutes after the last movement has been detected to sustain the life of the battery.

Features:

- 60 lb Pet Immune
- High White Light Immunity
- 50’ x 50’ Coverage
- Quad Element PIR
- Wall or Ceiling Mount Included
- Long Range Curtain (Optional)
- Ultra High White Light Immunity Lens (Optional)
- Calibration Free Installation
- State-of-the-art wireless PIR
- Low current ASIC PIR Technology
- Powered by a 3 Volt Lithium battery
- Battery life up to 4 years
- Built in Automatic Power Saver (APS)
- Low Battery condition signal transmission
- Test mode for PIR coverage and RF signal

Operation:

The 47A00-1 transmits the following event data:

Supervision: A periodic transmission every 60 minutes to indicate detectors presence.

Alarm: Alarm transmission triggered by PIR intrusion detection.

Battery Low: Whenever the battery reaches a preset low level (2.4V) "Battery Low" signal will be sent with the next message (i.e. Supervision, Alarm, etc.).

Tamper: Whenever the cover is removed from the 47A00-1 or the unit's cover is put back on, a message will be transmitted with "Tamper" signal.

APS: The unique APS (Automatic Power Saver) function built into the detector sustains the battery life up to four years. The detector will transmit only when the last event has occurred more than 2 minutes prior to the current one.

Notes:

1. After the PIR trips (because it senses motion), it will not trip again until 2-3 minutes after the last time is senses motion. For example, if you walk into a room and the PIR trips and you are in the room for the next 30 minutes walking around, it will not trip again while you are in the room. If you leave the room and return 5 minutes later, the motion will trip. So to reiterate, after it trips, it won't trip again until there has been no motion for 2-3 minutes. There is no way to adjust the delay time or operation.

2. During normal operation, the LED will never illuminate. The LED only illuminates during test mode.

3. There are 2 different test modes: a) walk test, and b) RF test.

4. To enter the walk test mode, quickly press and release the program button. Then, for the next 2 minutes as you walk if the path of the PIR, the LED will flash each time it senses motion.

5. To enter the RF test mode, press and hold the program button for 2 seconds. Every second the PIR will send a fault and restore signal to the receiver. This is also the mode that is used to enroll the detector.

6. With the case on the PIR, you can enter either one of the test modes by using a magnet (like the magnet that comes with the door/window transmitter). Place the magnet near the lower right of the case (right next to the location of the program button). Remove it quickly to enter walk mode or hold it next to the case for 2 seconds and then remove it to enter RF test mode.

7. You can not manually exit setup mode. The PIR will exit setup mode automatically after about 2 minutes.

Select Mounting Location:

Select the mounting location so that an intruder will cross the beams of the selected pattern. As the detector is a wireless transmitter, and in order to take full advantage of the sophisticated operation of the PIR, do not install the detector in areas where large metal objects could interfere with the transmission of signals. It is also advisable to avoid the following locations:

- Facing direct sunlight.
- Facing areas that may change temperature rapidly.
- Areas where there are air ducts or substantial airflows.
- Installation on a metal wall.

The 47A00-1 performs best in a constant and stable environment.

Mounting the Detector:

The 47A00-1 can be mounted in a corner like any standard PIR or can be easily mounted to a wall or ceiling by using the supplied hardware.

<u>Standard Corner Mounting</u>

1) Remove the screw at the bottom of the case and open.

2) Carefully mount using the screw guides for flat surface or corner mounting. It is acceptable to bend the antenna slightly in order to mount the case to the wall or desired surface.

<u>Wall or Ceiling Mount</u>

The supplied hardware is used to attach the 47A00-1 to a wall or ceiling. See diagram below.

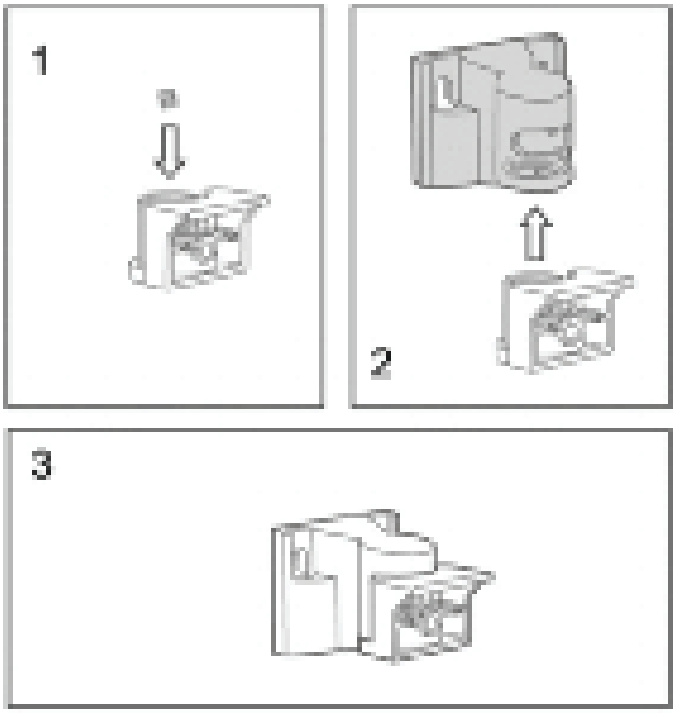

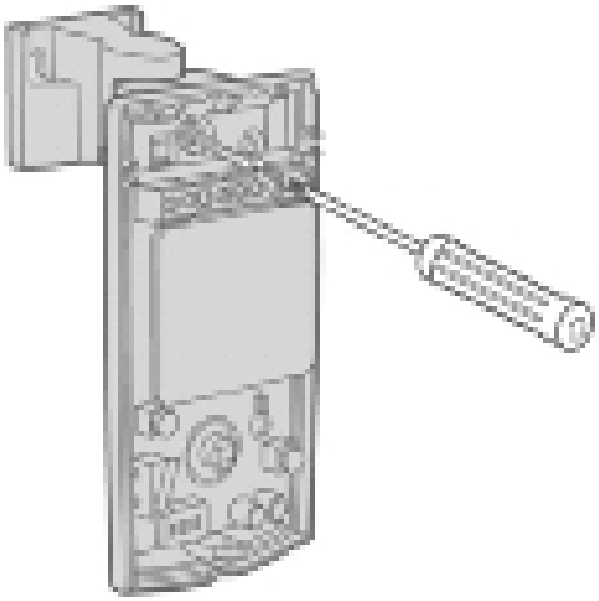

NOTE: The back bracket is not preinstalled in case a corner mount is desired. If the back bracket was installed at the factory and a corner mount was desired, the back bracket would need to be removed and 2 holes would then exist. There should never be a hole where insects can enter as they can cause false alarms.

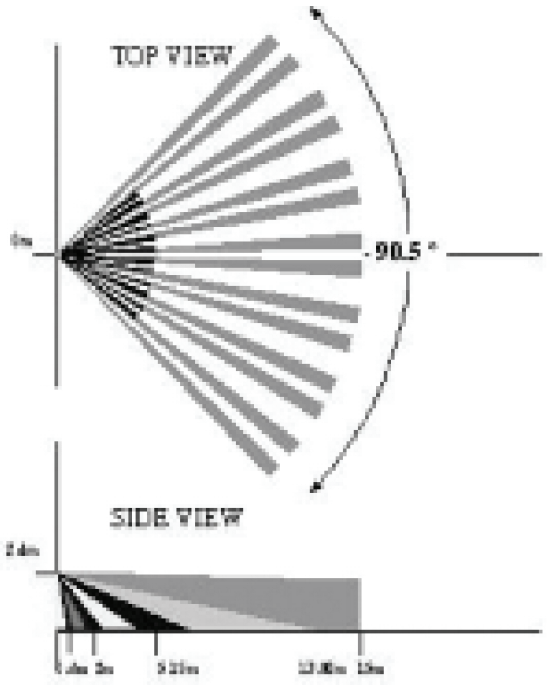

LENS PATTERN

Configuring the Detector:

The sensitivity adjustment switch is used to set the detector for normal or harsh environmental conditions.

Setting the Sensitivity Adjustment (Pulse Width) Jumper

- Position 1= Normal
- Position AUTO = Harsh

The "1" position setting is for normal operation.

The "AUTO" position setting is for harsh environment locations with air drafts or small animals.

Setting the Pet Immunity Level

Slide the switch to 25Kgs for larger pets up to 60 lbs. or 15kgs for smaller pets less than 30 lbs.

Enrolling the 47A00-1:

To enroll the 47A00-1, put the 45A00-1 Wireless Receiver in to Setup mode, advance to an unused address location, and then press and HOLD the program button located on the 47A00-1 circuit board for 2 seconds. The 47A00-1 will then send a series of transmissions and enroll the transmitter.

Refer to the Installation Instructions for the 45A00-1 for additional information.

Battery:

A 3 V Lithium Battery powers the unit. Thanks to the exclusive APS (Automatic Power Saver) characteristics, the battery provides about 4 years of continuous operation (depending on the amount of alarms). If the battery reaches a factory preset low level, the "Battery Low" signal will be sent and the detector will remain operational for 30 days; giving enough time to replace the battery.

Battery Replacement:

- Remove screw at the bottom of the case to open.
- Take out the old battery.
- Using a flat head screwdriver, short the two pins located behind the positive side of the battery holder for 10 seconds. This monetary short will discharge all remaining power from the circuits allowing a 'fresh' power up.
- Install a new battery according to polarity.

CAUTION:

THERE IS A RISK OF EXPLOSION IF THE BATTERY IS REPLACED BY AN INCORRECT TYPE. DISPOSE OF THE USED BATTERIES ACCORDING TO THE INSTRUCTIONS.

Federal Communications Commission (FCC) Statement:

This device complies with part 15 of the FCC Rules. Operation is subject to the following two conditions: (1) This device may not cause harmful interference, and (2) this device must accept any interference received, including interference that may cause undesired operation.

Technical Specifications:

Data Protocol:	HAI
Modulation Type:	ASK
Event Transmission:	Alarm, Tamper (Cover Off), Test, Supervision, and Battery Low
Supervision Timing:	60 minutes
Detection Method:	Quad Element
Detection Speed:	0.3 ~ 1.5 m/sec
Lens Type:	Spherical Hard Lens
Detection Coverage:	90.5 (50 x 50)
Environment Condition:	Jumper for Normal or Harsh selection
Battery Lithium:	3V Type: CR123A
Current Consumption:	Standby: ~10 mA
	Transmission: ~16 mA
Power Saving:	APS (Automatic Power Saver)
Install Test Modes:	LED Indicator (RF & Optic) Walk Test and Alarm Transmission Test
Operating Temperature:	-10° C to $+50^{o}$ C
Dimensions:	2.43” W x 4.25” H x 2” D